6100A 6180A

MODELS

Paperless Graphic Recorders

Specification Sheet

- **Colour touchscreen display**
- **USB 'plug & play'**
- **Up to 48 universal Inputs**
- **Up to 96MB non-volatile flash memory**
- **125ms parallel sampling**
- **Compact Flash or Secure Digital card**
- **Modbus RTU**
- **Ethernet TCP/IP**
- **Web server**

The 6000 Series offer unrivalled input accuracy with a 125ms total sample rate for up to 48 input channels. Input channels are freely configurable to suit your process requirements. Each instrument has an intuitive, touch screen display to enable operators to clearly view process data in varying formats. All have onboard Flash data storage capability, Ethernet communication and choice of Compact Flash or SD card. Data is stored in a tamper-resistant binary format that can be used for secure, long term records of your process. The 6000 Series is truly designed for todays networked world and can be accessed via a Local Area Network, dial-up connection, Intranet or Internet.

Available features		
	6100A	**6180A**
Display	5.5" 1/4 VGA	12.1" XGA
Channels	18	48
Relays	16	36
Events inputs	24 (6 per option card)	
Groups	6 standard (12 optional)	
Auditor features	Auditor or audit trail	
Virtual channels*	36, 96, 128	
Timers	Fitted as standard	
Alarms	4 per channel	
Batch	Optional	
Bridge- remote viewing software	Lite as standard (Full optional)	
Screen builder	24 (optional)	
Security	Unlimited unique user names with configurable access permissions and passwords	
Configuration software	Standard	
Review/Quickchart Lite software	Standard	
Standard views	Vertical and horizontal trending, Vertical and horizontal bargraphs, Circular trend and numeric values	

* Virtual channels can be configured as maths, totalisers, counters or comms

Data logging and archiving

The 6000 Series recorders have internal Flash memory for secure data storage. They are also able to accept various removable media types (Compact Flash, SD card or USB memory stick). Data stored within the internal memory can be archived to the removable media on demand or at preset intervals. The 6000 will give indication of how long its internal memory and that of the removable media installed will last according to the configuration of the recorder.

All 6000s have Ethernet capability. The 6000 can be configured to archive to the removable media and/or over Ethernet. Archiving files over Ethernet effectively gives a secure, infinite archiving capacity.

Approximate duration for continuous recording of one group of six channels, high compression:

	Sample rate						
Archive media	0.125s	0.5s	1s	5s	10s	30s	60s
32Mb Internal Flash (approx. 4 million samples)	2.83 days	11.3 days	22.6 days	113 days	226 days	1.86 yrs	3.7 yrs
96Mb Internal Flash (approx. 12 million samples)	8.5 days	33.98 days	67.9 days	339 days	1.86 yrs	5.5 yrs	11 yrs
64Mb CF/SD Card or USB memory stick (approx. 8 million samples)	5.66 days	22.6 days	45.3 days	226 days	1.2 yrs	3.7 yrs	7.4 yrs
256Mb CF/SD Card or USB memory stick (approx, 32 million samples)	22.6 days	90.6 days	181 days	2.4 yrs	4.9 yrs	14.8 yrs	20 yrs
1Gb CF/SD Card or USB memory stick (approx. 125 million samples)	88 Days	354 days	1.9 yrs	9.6 yrs	19 yrs	58 yrs	116 yrs
Ethernet (FTP Server)	Infinite						

Time synchronisation (SNTP)

The 6000 Series support Simple Network Time Protocol which, when enabled, updates the instrument time every 15 minutes from the configured SNTP server. The unit can also act as a Unicast SNTP server on the network, allowing client instruments to synchronise with the 6000 to a resolution of one millisecond.

Batch recording

Up to ten user-defined fields can be used to enter batch specific data.

Field descriptor	Operator entered batch information
– up to 20 characters	– up to 60 characters

The user can choose to log any number of the given fields on start and / or stop of a batch. The information will appear on the chart as a message and cannot be separated from the process data to which it relates.

Auditor features

Auditor
Designed to meet the requirements of the FDA Regulation 21 CFR Part 11 for Electronic Records and Signatures, this software option provides the 6000 Series with additional security such as password ageing, electronic signatures and time stamped audit trail.

Audit trail
A sub-set of the Auditor which provides the 6000 Series with a time stamped audit trail. It does not include password aging and electronic signatures.

Modbus master

Allows users to view data from multiple instruments connected either by a local Network connection using Modbus TCP, or a Serial connection using Modbus RTU,

Event input

The Event input option offers six isolated event input circuits per board fitted. Triggered externally these discrete inputs can be used to initiate internal actions within the 6000 Series Paperless Graphic Recorder. For example they could be used to remotely start or stop a Batch.

ASCII printer output (reports)

Fitted as standard the ASCII text printer option provides the 6000 Series with the ability to generate up to 10 simple reports that can be directed to a Serial ASCII text printer. Reports, triggered by an event/job can be configured to contain parameters such as time and date, batch names, process values and user defined messages.

Dynamic Host Configuration Protocol (DHCP)

Dynamic Host Configuration Protocol, the successor to BootP, allows a 6000 Series host to obtain Network parameters, such as IP address, Subnet Mask, default gateway and DNS server address dynamically. The implementation of DHCP on the 6000 Series significantly reduces the overhead for maintaining a network of instrumentation.

SPECIFICATION

Recorder

Environmental performance

Temperature limits	Operation:	0 to +50°C
	Storage:	–20 to 60°C
Humidity limits	Operation:	5% to 80% RH
	Storage:	5% to 90% RH
Protection	Bezel and display:	IP66
	Sleeve:	IP20
6100A Portable case option:		IP21
Shock:		BS EN61010
Vibration (10 to 150Hz):		BSEN60873, Section 9,18
Altitude:		<2000 metres

Approvals

Electromagnetic compatibility CE, cUL (EMC)

UL file number:	e57766
Emissions and immunity:	BS EN61326

Electrical safety

(BS EN61010):	Installation cat. II; Pollution degree 2

INSTALLATION CATEGORY II
The rate impulse voltage for equipment on nominal 230V mains is 2500V.

POLLUTION DEGREE 2
Normally, only non-conductive pollution occurs. Occasionally, however, a temporary conductivity caused by condensation shall be expected

Physical

Panel mounting:		DIN43700
Panel mounting angle:		±45°
6100A	Bezel size:	144 x 144mm
	Panel cutout dimensions:	138 x 138mm (both –0/+1mm)
	Depth behind bezel rear face:	246.5mm (284 LTC)
	Weight:	3kg max. (5kg if fitted in portable case)
6180A	Bezel size:	292 x 292mm
	Panel cutout dimensions:	281 x 281mm (both –0/+1mm)
	Depth behind bezel rear face:	261mm
	Weight:	7kg max.

Operator interface

Type:	Colour TFT LCD with cold cathode backlight, fitted with resistive, analogue, Touch-Panel
Size and resolution	
Model 6100A:	1/4VGA (320 x 240 pixels) 5.5”
Model 6180A:	XGA (1024 x 768 pixels) 12.1”

Power requirements

Supply voltage	Standard:	85 to 265V ac; 47 to 63Hz or 110 to 370V dc
	Low voltage option:	20 to 42V RMS;45 to 400Hz or 20 to 54V dc

Power (Max):	60VA (Inrush current 36A)
Fuse type:	None
Interrupt protection Standard:	Holdup >200msec, at 240V ac, with full load
Low voltage option:	20msec at 20V dc or RMS, with full load

Back-up battery

Type:	Poly-carbonmonofluoride/lithium (BR2330) Part No. PA261095
Support time (RTC):	1 year min. with recorder unpowered
Replacement period:	3 years
Stored data:	Time; date; values for totalisers, counters and timers; batch data; Fvalue, Rolling average, Stopwatch etc.

Ethernet communications

Type:	10/100baseT Ethernet. (IEEE802.3)
Protocols:	TCP/IP, FTP, DHCP, BOOTP, SNTP, MODBUS, SMTP, ICMP
Cable Type:	CAT5
Maximum length:	100 metres
Termination:	RJ45

Serial communications option

No of ports:	2
Protocol:	ASCII (typical applications: Input of ASCII string inputs from Barcode readers, Credit card readers etc.) ASCII printer support Modbus RTU Master and Slave
Isolation (dc to 65Hz BS EN61010):	Installation category II; Pollution degree 2
Terminals to ground:	50V RMS or dc (basic insulation)
Transmission standard:	EIA232 or EIA485 (software selectable)

Input board

General

Input types:	dc Volts, dc millivolts, dc milliamps (with shunt), Thermocouple, 2/3-wire RTD Contact closure (not Channels 1, 7, 13, 19, 25, 31, 37, 43) >60 ms
Input type mix:	Freely configurable.
Maximum number of inputs:	6 per board
A/D conversion method:	>16 bits, 2nd order delta sigma
Input ranges:	See Table1 and Table 2 below.
Termination:	Edge connector / terminal block
Noise rejection (48 to 62Hz):	Common mode: >140dB (channel to channel and channel to ground). Series mode: >60dB.
Maximum common mode voltage:	250 Volts continuous
Maximum series mode voltage:	45mV at lowest range; 23.74 Volts peak at highest range.
Isolation	
Channel to channel:	300V RMS or dc (double insulation)
Channel to common electronics:	300V RMS or dc (double insulation)
Channel to ground:	300V RMS or dc (basic insulation)
Dielectric strength (BS EN61010)	(1 minute type tests)
Channel to channel:	2500V ac
Channel to ground:	1500V ac
Insulation resistance:	>10MΩ at 500 V dc
Input impedance:	38mV, 150 mV, 1 V ranges: >10MΩ; 20V range: 65.3kΩ
Over voltage protection:	50 Volts peak (150V with attenuator)
Open circuit detection:	± 57nA max.
Recognition time:	500msec
Minimum break resistance:	10MΩ

Low Range	High Range	Resolution	Typical error (instrument at 20°C)	Maximum error (Instrument at 20°C)	Worst case temp Performance
–38mV	38mV	1.4µV	0.035% I/P + 0.031% range	0.085% I/P + 0.052% range	80ppm of I/P per °C
–150mV	150mV	5.5µV	0.035% I/P + 0.028% range	0.084% I/P + 0.039% range	80ppm of I/P per °C
–1V	1V	37µV	0.035% I/P + 0.024% range	0.084% I/P + 0.029% range	80ppm of I/P per °C
-20V	20V	720µV	0.097% I/P + 0.027% range	0.448% I/P + 0.033% range	443ppm of I/P per °C

Table 1 Voltage ranges - accuracy and resolution

Low Range	High Range	Resolution	Typical error (instrument at 20°C)	Maximum error (Instrument at 20°C)	Worst case temp Performance
0Ω	150Ω	5mΩ	0.027% I/P +0.034% range	0.042% I/P + 0.110% range	35ppm of I/P per °C
0Ω	600Ω	22mΩ	0.027% I/P +0.035% range	0.042% I/P + 0.065% range	35ppm of I/P per °C
0Ω	6kΩ	148mΩ	0.030% I/P +0.028% range	0.045% I/P + 0.035% range	35ppm of I/P per °C

Table 2 Resistance ranges - accuracy and resolution

Update/archive rates

Input/Relay-output sample rate:	8Hz
Trend update:	8Hz maximum
Archive sample-value:	Latest value at archive time
Display value:	Latest value at display update time (8Hz)

DC Input ranges

Shunt:	Externally mounted resistor modules
Additional error due to shunt:	0.1% of input
Additional error due to attenuator:	0.2% of input
Performance 6100A/6180A:	See Table 1

Thermocouple data

Temperature scale:	ITS 90
Bias current:	0.05 nA
Cold junction types:	Off, internal, external, remote
CJ error:	1°C max with inst. at 25°C
CJ rejection ratio:	50:1 minimum
Upscale/downscale drive	High, low or none selectable for each thermocouple channel
Additional error:	0.01°C (typ.) if high or low selected
Types and ranges:	See Table 3

T/C Type	Overall range (°C)	Standard	Max linearisation error
B	0 to +1820	IEC 584.1	0 to 400°C = 1.7°C 400 to 1820°C = 0.03°C
C	0 to +2300	Hoskins	0.12°C
D	0 to +2495	Hoskins	0.08°C
E	–270 to +1000	IEC 584.1	0.03°C
G2	0 to +2315	Hoskins	0.07°C
J	–210 to +1200	IEC 584.1	0.02°C
K	–270 to +1372	IEC 584.1	0.04°C
L	–200 to +900	DIN43710:1985 (To IPTS68)	0.02°C
N	–270 to +1300	IEC 584.1	0.04°C
R	–50 to +1768	IEC 584.1	0.04°C
S	–50 to +1768	IEC 584.1	0.04°C
T	–270 to +400	IEC 584.1	0.02°C
U	–200 to +600	DIN43710:1985	0.08°C
NiMo/NiCo	–50 to +1410	ASTM E1751-95	0.06°C
Ni/NiMo	0 to +1406	Ipsen	0.14°C
Platinel	0 to +1370	Engelhard	0.02°C
Pt20%Rh/ Pt40%Rh	0 to +1888	ASTM E1751-95	0.07°C

Table 3 Thermocouple types and ranges

Resistance inputs

Ranges (including lead resistance):	0 to 150Ω, 0 to 600Ω, 0 to 6kΩ
Influence of lead resistance	
Error:	Negligible
Mismatch:	1Ω/Ω
Temperature scale:	ITS90
Accuracy and resolution:	See Table 2
RTD types and ranges:	See Table 4

RTD Type	Overall range (°C)	Standard	Max linearisation error
Cu10	–20 to +400	General Electric Co.	0.02 °C
Cu53	–70 to ± 200	RC21-4-1966	<0.01°C
JPT100	–220 to +630	JIS C1604:1989	0.01 °C
Ni100	–60 to +250	DIN43760:1987	0.01 °C
Ni120	–50 to +170	DIN43760:1987	0.01 °C
Pt100	–200 to +850	IEC 751	0.01 °C
Pt100A	–200 to +600	Eurotherm Recorders SA	0.09 °C
Pt1000	–200 to +850	IEC 751	0.01 °C

Table 4 RTD types and ranges

Analogue output board

General

Max. number of OP boards: Four
Number of OPs per board: Two
Output ranges Voltage: 0 to 10V (source 5mA max.)
Current: 0 to 20mA (max. load 1KΩ)
Update rate: 8Hz
Step response: 250msec (10% to 90%)
Linearity: 0.024% of hardware range
Performance: See table

Performance in instrument at 20°C		
Range	Accuracy	Temperature drift
0 to 10V	0.1% of range	±0.12mV +0.022% of reading per °C
0 to 20mA	0.1% of range	±1µA + 0.03% of reading per °C

Safety isolation

Isolation: (dc to 65 Hz; BS EN61010): Installation category II; Pollution degree 2
Output channel-to OP channel: 300V RMS or dc (double insulation)
Output channel to ground: 150V RMS or dc (basic insulation)

Transmitter PSU

Isolated, 6100A recorder only
Number of outputs: Three
Output voltage: 25V nominal
Maximum current: 20mA per output
Isolation (dc to 65Hz BS61010): Installation category II; Pollution degree 2
Channel to channel: 100V RMS or DC (double insulation)
Channel to ground: 100V RMS or dc (basic insulation)
Fuse (20mm Type T)
Supply voltage = 110/120V ac: 100mA
Supply voltage = 220/240V ac: 63mA

Relay output board

General

Maximum number of relay boards 6100A: 4 (max no of relay outputs = 16)
6180A: 9 (max no of relay outputs = 36)
Number of relays per board: 3 per C/O
4 per N/C
4 per N/O
Estimated mechanical life: 30,000,000 operations
Update rate: See 'Update rates' in 'Recorder Specification' above

AC load ratings

Derating
The figures give below are for restive loads. for reactive or inductive loads, de-rate in accordance with Graph 1, in which:

F1 = Actually measured results on representative samples
F2 = Typical values according to experience
Contact life = Resistive contact life x reduction factor

Maximum switching power: 500VA
Maximum contact voltage: 250V providing this does not cause the maximum switching power (above) to be exceeded
Maximum contact current: 2 Amps providing this does not cause the maximum switching power (above) to be exceeded

DC load ratings

Maximum switching power: See Graph 2 for operating volt/amp envelope
Maximum contact voltage/ current: See Graph 2 for examples

Safety isolation

Isolation (dc to 65Hz; BS EN61010): Installation category II; Pollution degree 2
Relay to relay: 300V RMS or dc (double insulation)
Relay to ground: 300V RMS or dc (basic insulation)

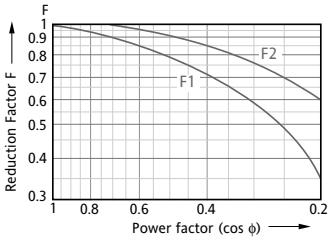

Graph 1
Derating curves for ac loads

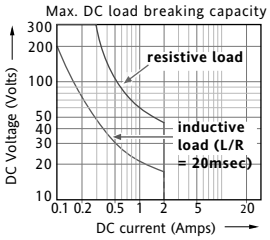

Graph 2
DC load switching curves

Event input

Number of inputs: 6 discrete inputs
Maximum No. of boards
6100A: 4
6180A: 4
Isolation
Event input to ground: 100V RMS or dc (basic insulation)
Event input to Event input: 0V
Recognition levels 'Active': –30V to +0.8V
'Inactive': +2 to +30V
Maximum frequency: 8Hz
Minimum pulse width: 62.5ms
Contact resistance Event: Active if resistance <35KΩ
Inactive if resistance >200KΩ
Status not defined if 35KΩ < resistance <200KΩ between input terminal and 'C' terminal
Current sink (voltage I/P): 10mA

Safety isolation

Event input to ground: 100V RMS or dc (basic insulation)
Event input to Event input: 0V

Portable

Portable option

6100A is available as a portable unit with either Thermocouple, General or HTM2010 connections

6180A is available with optional carry handle and feet for portability

6100A	Max. No of Inputs**	Option Slots**	Relays	Serial Comms	Transm'r PSU	Event I/P	Analogue O/P
General	18	4	Yes*	Yes	Yes*	Yes*	Yes*
Thermocouple	18	0	No	Yes	No	Yes*	No
HTM2010	18	0	No	Yes		No	No

** Mutually exclusive * Requires one option slot

Portable mechanical installation

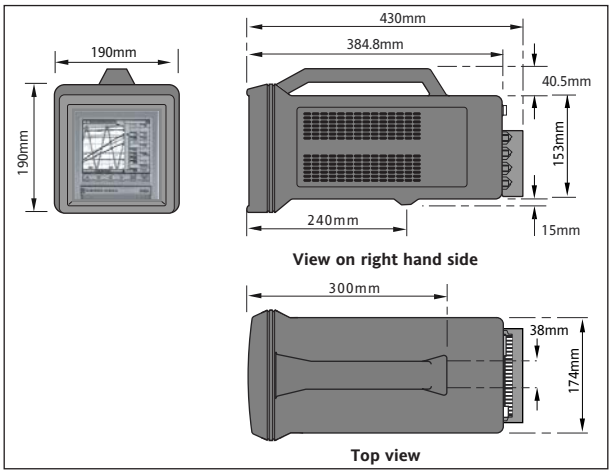

Mechanical installation

6100A

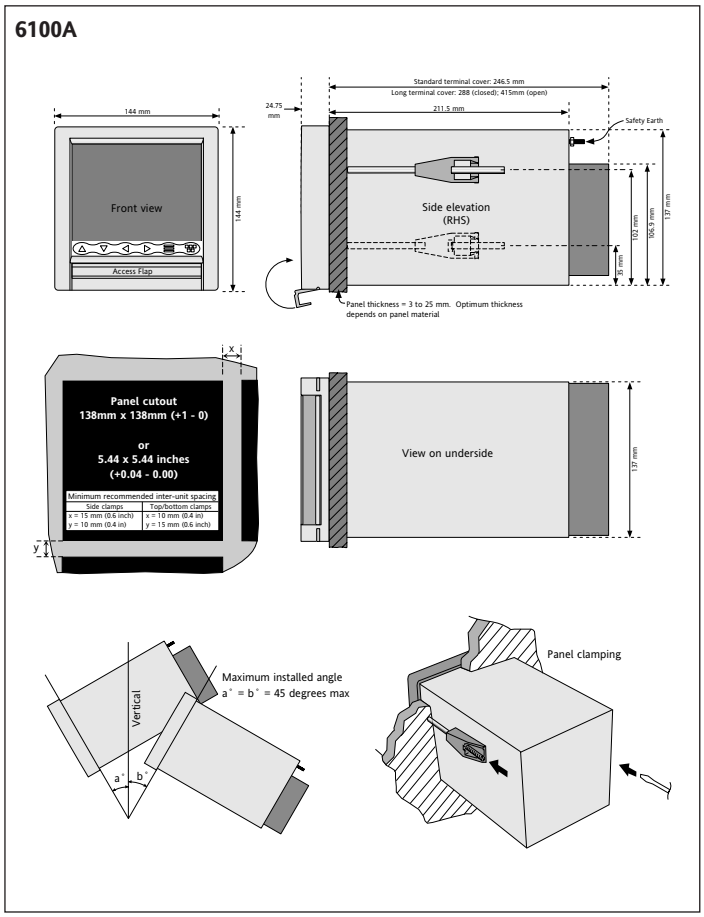

6180A

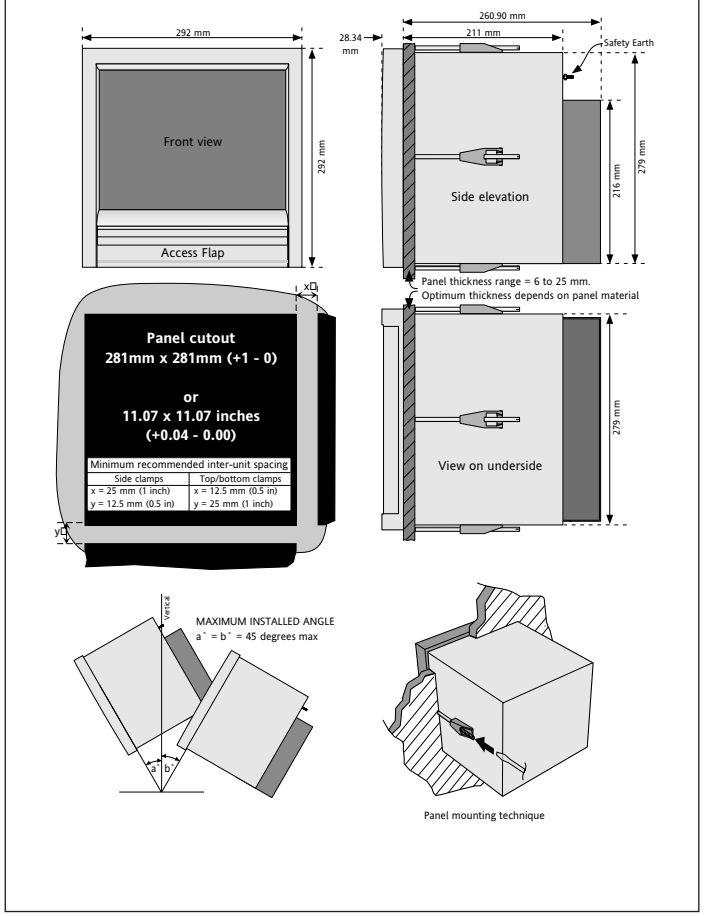

Input board wiring

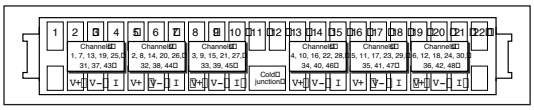

Relay board wiring

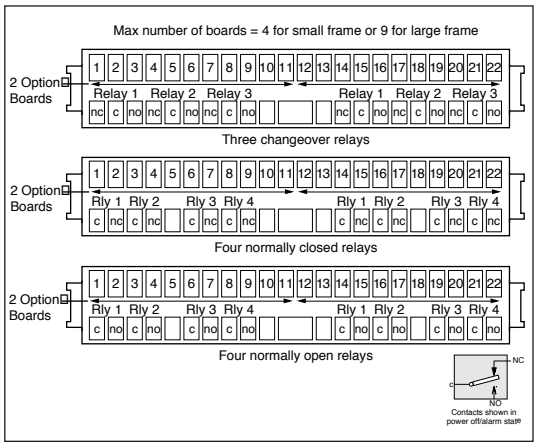

Isolated transmitter power supply wiring

(6100A only)

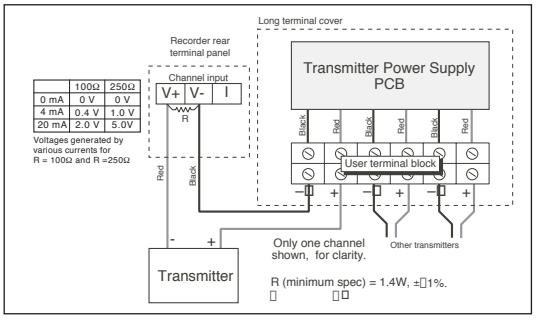

Event input board wiring

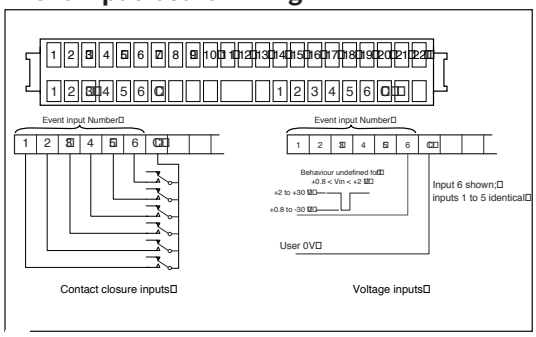

Analogue output wiring

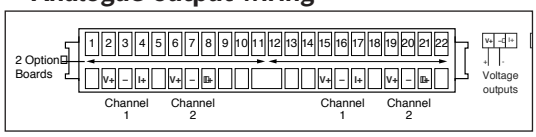

Input board signal wiring

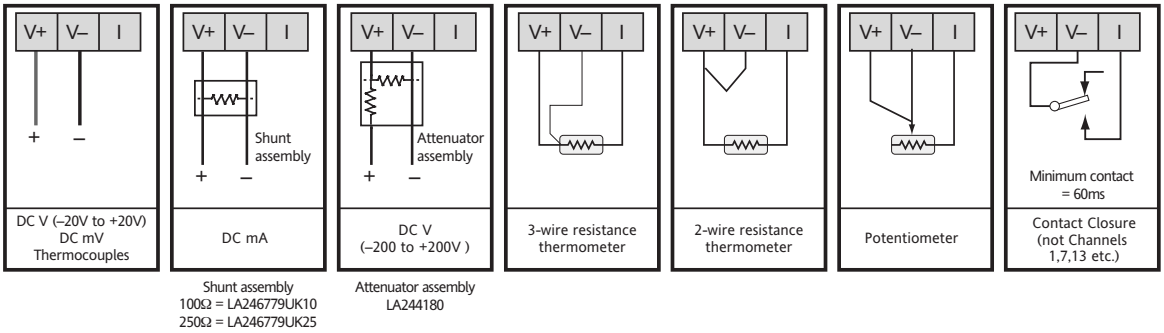

Rear terminal connections

Serial Comms

Pin	EIA232	EIA485 (5-wire)	EIA485 (3-wire)
1	NC	RxA	Link to pin 7
2	Rx	NC	NC
3	Tx	NC	NC
4	DTR	NC	NC
5	Signal ground	Signal ground	Signal ground
6	NC	RxB	Link to pin 8
7	NC	TxA	TxA/RxA
8	NC	TxB	TxB/RxB
9	5V via 1500Ω	5V via 1500Ω	5V via 1500Ω

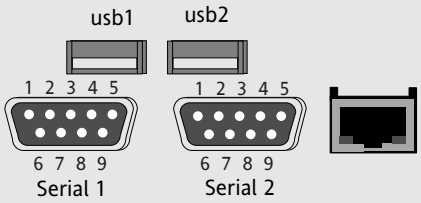

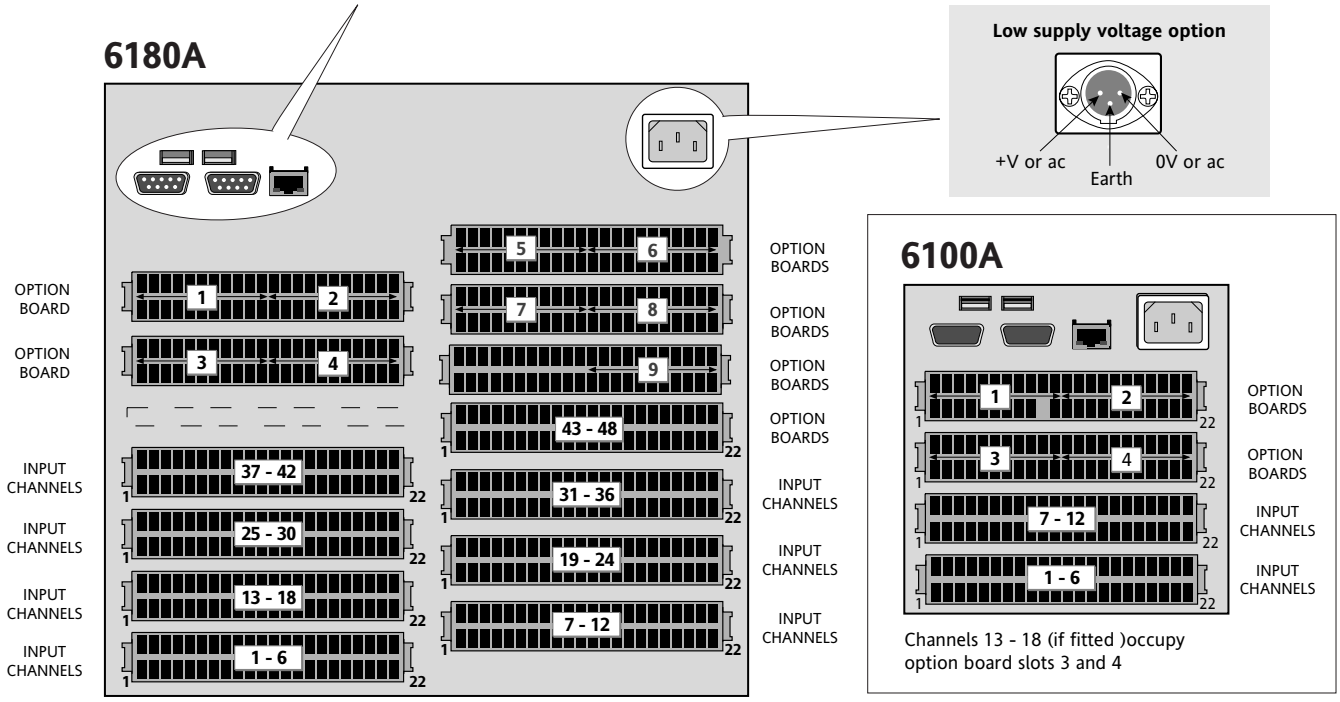

Ordering code

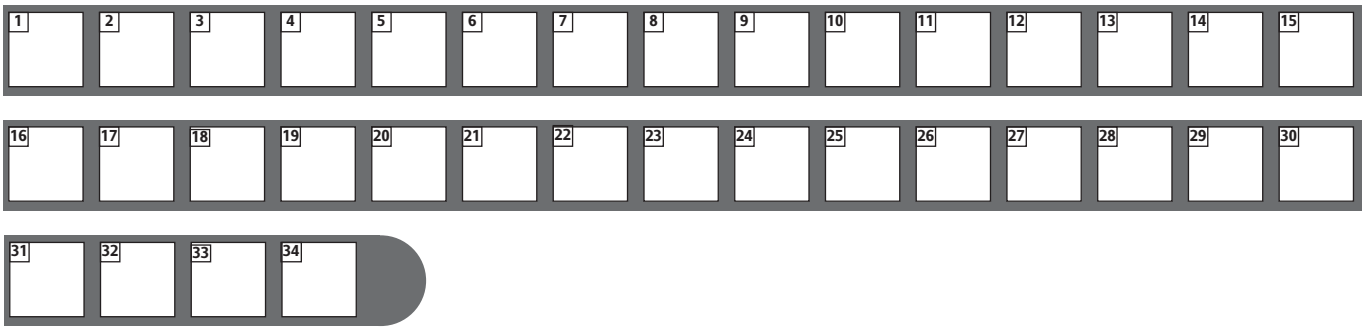

0 Model
- 6100A 100mm TFT 1/4VGA Display **6100A**
- 6180A 180mm TFT XGA Display **6180A**

1 Number of channels
- 0 Input channels **U00**
- 6 Input Channels **U06**
- 12 Input Channels **U12**
- 18 Input Channels **U18**
- 24 Input Channels (6180A only) **U24**
- 30 Input Channels (6180A only) **U30**
- 36 Input Channels (6180A only) **U36**
- 42 Input Channels (6180A only) **U42**
- 48 Input Channels (6180A only) **U48**

2 Not used ..... **XXX**

3 Case options
- Panel mounting ..... **PANEL**
- General Portable (6100A only) ..... **PORTGEN**
- Type T Thermocouple Portable (6100A only) ..... **PORTTTC**
- Type K Thermocouple Portable (6100A only) ..... **PORTKTC**
- Type J Thermocouple Portable (6100A only) ..... **PORTJTC**
- Voltage Input only Portable (6100A only) ..... **PORTVTC**
- HTM2010/2030 Portable Test kit (6100A only) **HTM2010**
- Carry Handle (Bezel Colour Silver, 6180A only) ..... **CH**
- Panel Mounting with Heavy Duty Case clamps (6180A only) ..... **PMHD**
- Panel Mounting with Thin panel mounting kit (6180A only) ..... **PMTN**

4 Lock
- Media lock not fitted ..... **NOLCK**
- Electronic Lock Fitted ..... **LOCK**

5 Bezel colour
- Silver including portable options ..... **SLV**
- Eurotherm Green ..... **GRN**
- Black ..... **BLK**

6 Power supply
- 90- 264 Vac (110-370Vdc) 47 –63 Hz ..... **VH**
- 20 – 42 Vac (20 – 54Vdc) ..... **VL**

7 24V Isolated transmitter power supply
- Not fitted ..... **NONE**
- 110 – 120Vac 3channel TPS (6100A only) **115TPS**
- 220 – 240Vac 3 channel TPS (6100A only) **230TPS**

8 Non standard
- Non Standard Option ..... **XXXXXX**

9 Internal memory .....
- 32M Byte for history – approximately 4 million samples **032M**
- 96M Byte for history – approximately 12 million samples **096M**

10 Removable media
- Compact Flash and Front USB port ..... **CF**
- Secure Digital and Front USB port ..... **SD**

11 Memory card size
- Not fitted ..... **NOMC**
- 128M byte Card (CF or SD, dependant on removable media type) . **128M**
- 256M byte Card (CF or SD, dependant on removable media type) . **256M**
- 512M byte Card (CF or SD, dependant on removable media type) . **512M**
- 1Gbyte Card (CF or SD, dependant on removable media type) **001G**

12 USB Memory stick size
- Not fitted ..... **NOMS**
- 64M byte USB Memory Stick **064MMS**
- 256M byte USB Memory Stick **256MMS**
- 512M byte USB Memory Stick **512MMS**
- 1G byte USB Memory Stick **001GMS**

13 Rear USB
- No rear USB ports **0RUSB**
- Two USB ports at rear of product **2RUSB**

14 Serial communication ports
- Not fitted **0SRL**
- Two EIA 232/422/485 Serial Ports **2SRL**

15 Not used ..... **XXXX**

16 Calibration certificates
- Not required ..... **NOCAL**
- Calibration certificate ..... **CAL**

17 Changeover relays
- Not fitted **00**
- 3 changeover relays (1 option board) **03**
- 6 changeover relays (2 option boards) **06**
- 9 changeover relays (3 option boards) **09**
- 12 changeover relays (4 option boards) **12**
- 15 changeover relays (5 option boards, 6180A only) **15**
- 18 changeover relays (6 option boards, 6180A only) **18**
- 21 changeover relays (7 option boards, 6180A only) **21**
- 24 changeover relays (8 option boards, 6180A only) **24**
- 27 changeover relays (9 option boards, 6180A only) **27**

18 Normally closed relays
- Not fitted **00**
- 4 Normally Closed relays (1 option board) **04**
- 8 Normally Closed relays (2 option boards) **08**
- 12 Normally Closed relays (3 option boards) **12**
- 16 Normally Closed relays (4 option boards) **16**
- 20 Normally Closed relays (5 option boards, 6180A only) **20**
- 24 Normally Closed relays (6 option boards, 6180A only) **24**
- 28 Normally Closed relays (7 option boards, 6180A only) **28**
- 32 Normally Closed relays (8 option boards, 6180A only) **32**
- 36 Normally Closed relays (9 option boards, 6180A only) **36**

19 Normally open relays
- Not fitted **00**
- 4 Normally Open relays (1 option board) **04**
- 8 Normally Open relays (2 option boards) **08**
- 12 Normally Open relays (3 option boards) **12**
- 16 Normally Open relays (4 option boards) **16**
- 20 Normally Open relays (5 option boards, 6180A only) **20**
- 24 Normally Open relays (6 option boards, 6180A only) **24**
- 28 Normally Open relays (7 option boards, 6180A only) **28**
- 32 Normally Open relays (8 option boards, 6180A only) **32**
- 36 Normally Open relays (9 option boards, 6180A only) **36**

20 Event inputs
- Not fitted **00**
- 06 Event Inputs (1 board) **06**
- 12 Event Inputs (2 boards) **12**
- 18 Event Inputs (3 boards) **18**
- 24 Event Inputs (4 boards) **24**

21 Analogue outputs
- None **00**
- 2 Analogue Outputs (1 option board) **02**
- 4 Analogue Outputs (2 option boards) **04**
- 6 Analogue Outputs (3 option boards) **06**
- 8 Analogue Outputs (4 option boards) **08**

22 Quantity of shunts
- Enter quantity required ..... **_ _**

23 Shunt value
Not required ..... **NOS**
100 ohm shunts **100**
250 ohm shunts **250**

24 Quantity of attenuators (100:1)
Enter quantity required ..... **_ _**

25 Warranty
Standard warranty ..... **XXXXX**
Extended warranty **WL005**

26 Bridge
Bridge Lite (supplied as standard) ..... **BLITE**
Bridge Full ..... **BFULL**

27 Review and quickchart
Review and Quickchart Lite (supplied as standard) ..... **RLITE**
Review and Quickchart Full ..... **RFULL**

28 Auditor
Not required ..... **NOADT**
Audit Trail ..... **ALITE**
Auditor Full ..... **AFULL**

29 Security manager
Not required ..... **NOSM**
Security Manager ..... **SECMAN**

30 Groups
6 Groups (supplied as standard) **06GROUP**
12 Groups **12GROUP**

31 Maths, totalisers and counters
Not required **MTC00**
36 Virtual Channels **MTC36**
96 Virtual Channels **MTC96**
128 Virtual Channels **MTC128**

32 Batch
Not required ..... **NOBTCH**
Batch ..... **BATCH**

33 Screen builder
Not required ..... **NOSB**
Advanced screen builder ..... **ADSB**

34 Master communications
Not required ..... **NOMSTR**
Modbus Master Comms for 16 slaves **MSTR16**
Modbus Master Comms for 32 slaves **MSTR32**

Eurotherm: International sales and service

Understanding and providing local support is a key part of Eurotherm's business. Complementing worldwide Eurotherm offices are a whole range of partners and a comprehensive technical support team... to ensure you get a service you will want to go back to.

AUSTRALIA *Sydney*
Eurotherm Pty. Ltd.
T (+61 2) 9838 0099
F (+61 2) 9838 9288
E *info.au@eurotherm.com*

AUSTRIA *Vienna*
Eurotherm GmbH
T (+43 1) 7987601
F (+43 1) 7987605
E *info.at@eurotherm.com*

BELGIUM & LUXEMBOURG *Moha*
Eurotherm S.A/N.V.
T (+32) 85 274080
F (+32) 85 274081
E *info.be@eurotherm.com*

BRAZIL *Campinas-SP*
Eurotherm Ltda.
T (+5519) 3707 5333
F (+5519) 3707 5345
E *info.br@eurotherm.com*

DENMARK *Copenhagen*
Eurotherm Danmark AS
T (+45 70) 234670
F (+45 70) 234660
E *info.dk@eurotherm.com*

FINLAND *Abo*
Eurotherm Finland
T (+358) 22506030
F (+358) 22503201
E *info.fi@eurotherm.com*

FRANCE *Lyon*
Eurotherm Automation SA
T (+33 478) 664500
F (+33 478) 352490
E info.*fr@eurotherm.com*

GERMANY *Limburg*
Eurotherm Deutschland GmbH
T (+49 6431) 2980
F (+49 6431) 298119
E *info.de@eurotherm.com*

HONG KONG & CHINA
Eurotherm Limited *North Point*
T (+85 2) 28733826
F (+85 2) 28700148
E *info.hk@eurotherm.com*
Guangzhou Office
T (+86 20) 8755 5099
F (+86 20) 8755 5831
E *info.cn@eurotherm.com*
Beijing Office
T (+86 10) 6567 8506
F (+86 10) 6567 8509
E *info.cn@eurotherm.com*
Shanghai Office
T (+86 21) 6145 1188
F (+86 21) 6145 1187
E *info.cn@eurotherm.com*

INDIA *Chennai*
Eurotherm India Limited
T (+91 44) 24961129
F (+91 44) 24961831
E *info.in@eurotherm.com*

IRELAND *Dublin*
Eurotherm Ireland Limited
T (+353 1) 4691800
F (+353 1) 4691300
E *info.ie@eurotherm.com*

ITALY *Como*
Eurotherm S.r.l
T (+39 31) 975111
F (+39 31) 977512
E *info.it@eurotherm.com*

KOREA *Seoul*
Eurotherm Korea Limited
T (+82 31) 2738507
F (+82 31) 2738508
E *info.kr@eurotherm.com*

NETHERLANDS *Alphen a/d Rijn*
Eurotherm B.V.
T (+31 172) 411752
F (+31 172) 417260
E *info.nl@eurotherm.com*

NORWAY *Oslo*
Eurotherm A/S
T (+47 67) 592170
F (+47 67) 118301
E *info.no@eurotherm.com*

POLAND *Katowice*
Invensys Eurotherm Sp z o.o.
T (+48 32) 2185100
F (+48 32) 2177171
E *info.pl@eurotherm.com*

SPAIN *Madrid*
Eurotherm España SA
T (+34 91) 6616001
F (+34 91) 6619093
E *info.es@eurotherm.com*

SWEDEN *Malmo*
Eurotherm AB
T (+46 40) 384500
F (+46 40) 384545
E *info.se@eurotherm.com*

SWITZERLAND *Wollerau*
Eurotherm Produkte (Schweiz) AG
T (+41 44) 7871040
F (+41 44) 7871044
E *info.ch@eurotherm.com*

UNITED KINGDOM *Worthing*
Eurotherm Limited
T (+44 1903) 268500
F (+44 1903) 265982
E *info.uk@eurotherm.com*
www.eurotherm.co.uk

U.S.A. *Leesburg VA*
Eurotherm Inc.
T (+1 703) 443 0000
F (+1 703) 669 1300
E *info.us@eurotherm.com*
www.eurotherm.com

ED53

Printed on recycled paper in England 04.07